Optimal design and off-design performance improvement for an automotive HT-PEMFC system

Institut für Verbrennungskraftmaschinen
und Brennstoffzellen

Description

Achieving carbon neutrality is commonly viewed as the key solution for tackling global warming, paving the way for a sustainable world (e.g., Climate Action Plan 2050). Proton exchange membrane fuel cells (PEMFCs), which use clean hydrogen as fuel to generate green electricity, are considered a promising power generation technology. Compared to low-temperature PEMFCs, high-temperature PEMFCs present advantages for future commercialization such as mobile and stationary applications, due to their enhanced capacity to withstand impurities, simplified water management, and more convenient heat rejection etc. This study focuses on the optimal design of an automotive HT-PEMFC and enhancing its performance in off-design conditions under different test system cycles, starting from the aspects of thermodynamic and exergo-economic performance.

Your responsibilities

- Literature survey on automotive fuel cell systems includes both steady-state and dynamic scenarios
- System modeling for a tens of kWs automotive HT-PEMFC system
- Parametric study and performance optimization using advanced algorithms
- Documentation on all the project activities
- Participation in regional workshops/seminars is also encouraged

Prerequisites

- Ability to work independently with a teamwork mindset
- Basic knowledge in electrochemistry, MATLAB, and EES would be beneficial
- Very good knowledge of English, both written and spoken

Die TU Braunschweig strebt in allen Bereichen und Positionen an, eine Unterrepräsentanz im Sinne des NGG abzubauen. Daher sind Bewerbungen von Frauen besonders erwünscht und können nach Maßgabe des §11 NGG bevorzugt berücksichtigt werden. Schwerbehinderte werden bei gleicher Eignung bevorzugt. Ein Nachweis ist beizufügen. Zu Zwecken der Durchführung des Bewerbungsverfahrens werden personenbezogene Daten gespeichert.

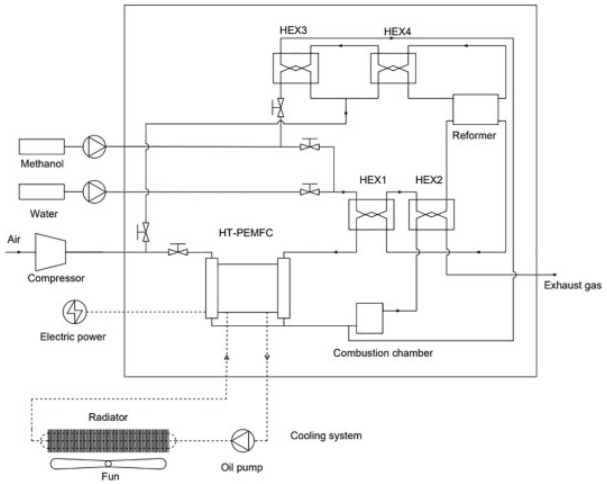

Source:https://www.sciencedirect.com/science/article/pii/S0196890421013583

Starting: **Soon in 2024**

☒ Bachelor Thesis ☒ theoretical
☒ Student Thesis ☒ simulative
☒ Master Thesis ☐ experimental

Contact

Zhaoda Zhong, MSc
Guest PhD Researcher

c/o Xin Gao, Dr.,
Senior scientist,
Hermann-Blenk-Str. 42
Room: 107
Telefon: +49 531 / 391 66925
Mail: xin.gao@tu-braunschweig.de

Technische Universität Braunschweig